Alberta
MUNICIPAL AFFAIRS

ABSA
the pressure equipment safety authority

STATUTORY DECLARATION
Registration of Fittings

In this space, show facsimile of manufacturer's logo or trademark as it will appear on the fitting.

Parker

I, Kevin Ballard,

Core Engineering Manager
(company title, e.g. vice president, plant manager, chief engineer) (must be in a position of authority)

of Parker Hannifin, IPDE
(name of manufacturer)

located at Riverside Road, Barnstaple, Devon, EX31 1NP
(plant address)

do solemnly declare that the fittings listed hereunder, which are subject to the Safety Codes Act (check one)

☐ comply with the requirements of ____________ (title of recognized North American Standard) which specifies the dimensions, materials of construction, pressure/temperature ratings and identification marking of the fittings, or

☒ are not covered by the provisions of a recognized North American standard and are therefore manufactured to comply with ASME II, VIII, ANSI B16.5 as supported by the attached data which identifies the dimensions, materials of construction, pressure/temperature ratings and the basis for such ratings, and the marking of the fittings for identification.

I further declare that the manufacture of these fittings is controlled by a quality control program which has been verified by the following authority, DNV Management Systems as being suitable for the manufacture of these fittings to the stated standard. The fittings covered by this declaration, for which I seek registration, are See attached drawing

In support of this application, the following information, calculations and/or test data are attached:
Catalog 4190-FP-ACC FCB CRN Report (Sheets 1 & 2)

N.B: CRN 0A6793.5 also exists with respect to a portion of this design

DECLARED before me at Barnstaple in the County of Devon

this 20th day of April (Month), 2011 (Year)

(print) KEVIN BALLARD — K Ballard (Signature of Applicant)

(sign) Michael T. Orton (A Commissioner for Oaths) Notary Public MICHAEL THOMAS OERTON

For Office Use Only

To the best of my knowledge and belief, the application meets the requirements of the Safety Codes Act and CSA Standard B51, Clause 4.2, and is accepted for registration in Category A

Registration Number: 0B11767.2 — MILLA GRYNCHUK (For the Administrator/Chief Inspector of Alberta)

Date Registered: OCT 13 2011 — Expiry Date: 2020-10-13

The information you provide is necessary only for the administration of the programs as required by the Alberta Safety Codes Act and Regulations in the Boiler Discipline.

THE FITTINGS are registered to ASME B31.3. See the acceptance letter and the scope of registration attached. d.m.

Material - 316 Stainless Steel SA 182

	1/4" CWP (PSI) @				3/8" CWP (PSI) @			
	Flange Rating		A-LOK Rating		Flange Rating		A-LOK Rating	
Class	100°F	Max Temp (1000°F)	100°F	Max Temp (1000°F)	100°F	Max Temp (1000°F)	100°F	Max Temp (1000°F)
2500	6000	2915	10300	7931	6000	2915	6600	5082
1500	3600	1750	10300	7931	3600	1750	6600	5082
900	2160	1050	10300	7931	2160	1050	6600	5082
600	1440	700	10300	7931	1440	700	6600	5082
300	720	350	10300	7931	720	350	6600	5082
150	275	20	10300	7931	275	20	6600	5082

	1/2" CWP (PSI) @				3/4" CWP (PSI) @			
	Flange Rating		A-LOK Rating		Flange Rating		A-LOK Rating	
Class	100°F	Max Temp (1000°F)	100°F	Max Temp (1000°F)	100°F	Max Temp (1000°F)	100°F	Max Temp (1000°F)
2500	6000	2915	6700	5159	X	X	5800	4466
1500	3600	1750	6700	5159	3600	1750	5800	4466
900	2160	1050	6700	5159	2160	1050	5800	4466
600	1440	700	6700	5159	1440	700	5800	4466
300	720	350	6700	5159	720	350	5800	4466
150	275	20	6700	5159	275	20	5800	4466

	1" CWP (PSI) @			
	Flange Rating		A-LOK Rating	
Class	100°F	Max Temp (1000°F)	100°F	Max Temp (1000°F)
2500	X	X	X	X
1500	3600	1750	4700	3619
900	2160	1050	4700	3619
600	1440	700	4700	3619
300	720	350	4700	3619
150	275	20	4700	3619

X = Products no to be submitted

Minimum Design Metal Temperature: ~~-425~~°F

-325°F

0B11767.2

FOR MATERIAL AND PROCESS SPECIFICATIONS REFER TO GENRIC PROCESS CONTROL SHEET
FOR PART MARKING DETAILS REFER TO PART MARKING SPECIFICATION

THIS DRAWING CONTAINS INFORMATION THAT IS CONFIDENTIAL AND PROPRIETY TO PARKER HANNIFIN PLC. THIS DRAWING IS FURNISHED ON THE UNDERSTANDING THAT THE DRAWING AND THE INFORMATION IT CONTAINS WILL NOT BE COPIED OR DISCLOSED TO OTHERS EXCEPT WITH THE WRITTEN CONSENT OF PARKER HANNIFIN. WILL NOT BE USED TO THE DETRIMENT OF PARKER HANNIFIN, AND WILL BE RETURNED UPON REQUEST BY PARKER HANNIFIN.

ISSUE NO.	1	DESCRIPTION OF REVISION	DRAWN BY: ZN
E.C.N NO.	N/A	New Release	DRAWN DATE 22/06/2011
DATE	13/04/2011		Approvals using electronic PDM WORKFLOW (QSP05/25)

ALL DIMENSIONS IN UNLESS OTHERWISE STATED

DRAWING TITLE :
FLANGE TO COMPRESSION CONNECTOR
FLANGE HUB WALL THICKNESS CALCULATIONS

REMOVE ALL SHARP EDGES AND BURRS

INCH	METRIC	ANGULAR
(.00") ± .015" (.000") ± .005"	(.0)mm ± .3mm (.00mm) ± 0.1mm	±1/2° ±30'

UNLESS STATED 3rd ANGLE PROJECTION

GENERAL M/C FINISH 63min CLA/ 1.6mm RA GEOMETRICAL TOL'S TO BS.308 PART 3. ALL THREAD TOLERANCES ARE TO BE IN ACCORDANCE WITH PARKER IPD ESST01.

PART SIMILAR TO

DO NOT SCALE IF IN DOUBT ASK

Parker
Parker Hannifin Ltd
Instrumentation Products Division Europe
Riverside Road
Barnstaple
Devon
EX31 1NP
+44 (0)1271 313131

Material - Alloy 400 SB 564 N°4400

	1/4" CWP (PSI) @				3/8" CWP (PSI) @			
	Flange Rating		A-LOK Rating		Flange Rating		A-LOK Rating	
Class	100°F	Max Temp (700°F)	100°F	Max Temp (700°F)	100°F	Max Temp (700°F)	100°F	Max Temp (700°F)
2500	5000	3960	9800	4214	5000	3960	6100	2623
1500	3000	2375	9800	4214	3000	2375	6100	2623
900	1800	1435	9800	4214	1800	1435	6100	2623
600	1200	950	9800	4214	1200	950	6100	2623
300	900	475	9800	4214	900	475	6100	2623
150	230	110	9800	4214	230	110	6100	2623

	1/2" CWP (PSI) @				3/4" CWP (PSI) @			
	Flange Rating		A-LOK Rating		Flange Rating		A-LOK Rating	
Class	100°F	Max Temp (700°F)	100°F	Max Temp (700°F)	100°F	Max Temp (700°F)	100°F	Max Temp (700°F)
2500	5000	3960	6200	2666	5000	3960	5400	2322
1500	3000	2375	6200	2666	3000	2375	5400	2322
900	1800	1435	6200	2666	1800	1435	5400	2322
600	1200	950	6200	2666	1200	950	5400	2322
300	900	475	6200	2666	900	475	5400	2322
150	230	110	6200	2666	230	110	5400	2322

	1" CWP (PSI) @			
	Flange Rating		A-LOK Rating	
Class	100°F	Max Temp (700°F)	100°F	Max Temp (700°F)
2500	5000	3960	4300	1849
1500	3000	2375	4300	1849
900	1800	1435	4300	1849
600	1200	950	4300	1849
300	900	475	4300	1849
150	230	110	4300	1849

X = Products no to be submitted

0B11767.2

***** = Max working temperature rated in standard class is 900° F. Ref Page66 ASME B16.34 1996**

Minimum Design Metal Temperature: - 325 °F

FOR MATERIAL AND PROCESS SPECIFICATIONS REFER TO GENRIC PROCESS CONTROL SHEET

FOR PART MARKING DETAILS REFER TO PART MARKING SPECIFICATION

THIS DRAWING CONTAINS INFORMATION THAT IS CONFIDENTIAL AND PROPRIETY TO PARKER HANNIFIN PLC. THIS DRAWING IS FURNISHED ON THE UNDERSTANDING THAT THE DRAWING AND THE INFORMATION IT CONTAINS WILL NOT BE COPIED OR DISCLOSED TO OTHERS EXCEPT WITH THE WRITTEN CONSENT OF PARKER HANNIFIN. WILL NOT BE USED TO THE DETRIMENT OF PARKER HANNIFIN, AND WILL BE RETURNED UPON REQUEST BY PARKER HANNIFIN.

ISSUE NO.	1	DESCRIPTION OF REVISION	DRAWN BY: ZN
E.C.N NO.	N/A	New Release	DRAWN DATE 22/06/2011
DATE	13/04/2011		Approvals using electronic PDM WORKFLOW (QSP05/25)

ALL DIMENSIONS IN UNLESS OTHERWISE STATED

DRAWING TITLE :

FLANGE TO COMPRESSION CONNECTOR
FLANGE HUB WALL THICKNESS CALCULATIONS

REMOVE ALL SHARP EDGES AND BURRS

INCH	METRIC	ANGULAR
(.00") ± .015" (.000") ± .005"	(.0)mm ± .3mm (.00mm) ± 0.1mm	± 1/2° ± 30'

UNLESS STATED 3rd ANGLE PROJECTION

GENERAL M/C FINISH 63min CLA/ 1.6mm RA GEOMETRICAL TOL'S TO BS.308 PART 3. ALL THREAD TOLERANCES ARE TO BE IN ACCORDANCE WITH PARKER IPD ESST01.

PART SIMILAR TO

DO NOT SCALE IF IN DOUBT ASK

Parker
Parker Hannifin Ltd
Instrumentation Products Division Europe
Riverside Road
Barnstaple
Devon
EX31 1NP
+44 (0)1271 313131

Material - Alloy 625 SB 564 N°6625

	1/4" CWP (PSI) @				3/8" CWP (PSI) @			
	Flange Rating		A-LOK Rating		Flange Rating		A-LOK Rating	
Class	100°F	Max Temp (1000°F)	100°F	Max Temp (1000°F)	100°F	Max Temp (1000°F)	100°F	Max Temp (1000°F)
2500	6250	3030	6800	4964	6250	3030	8700	6351
1500	3750	1820	6800	4964	3750	1820	8700	6351
900	2250	1090	6800	4964	2250	1090	8700	6351
600	1500	725	6800	4964	1500	725	8700	6351
300	750	365	6800	4964	750	365	8700	6351
150	290	20	6800	4964	290	20	8700	6351

	1/2" CWP (PSI) @				3/4" CWP (PSI) @			
	Flange Rating		A-LOK Rating		Flange Rating		A-LOK Rating	
Class	100°F	Max Temp (1000°F)	100°F	Max Temp (1000°F)	100°F	Max Temp (1000°F)	100°F	Max Temp (1000°F)
2500	6250	3030	6800	4964	6250	3030	4400	3212
1500	3750	1820	6800	4964	3750	1820	4400	3212
900	2250	1090	6800	4964	2250	1090	4400	3212
600	1500	725	6800	4964	1500	725	4400	3212
300	750	365	6800	4964	750	365	4400	3212
150	290	20	6800	4964	290	20	4400	3212

Minimum Design Metal Temperature: - 20 °F

X = Products no to be submitted

OKA
SAFETY CODES ACT - PROVINCE OF ALBERTA
REGISTRATION OF FITTINGS
REGISTRATION NO. A B 11767 . 2
DWG. NO. or CAT. NO. Scope
TYPE OF FITTINGS Connectors
OCT 13 2011
Date
INITIALS
MILLA GRYNCHUK, P.Eng.
DESIGN SURVEY ENGINEER

FOR MATERIAL AND PROCESS SPECIFICATIONS REFER TO GENRIC PROCESS CONTROL SHEET
FOR PART MARKING DETAILS REFER TO PART MARKING SPECIFICATION

THIS DRAWING CONTAINS INFORMATION THAT IS CONFIDENTIAL AND PROPRIETY TO PARKER HANNIFIN PLC. THIS DRAWING IS FURNISHED ON THE UNDERSTANDING THAT THE DRAWING AND THE INFORMATION IT CONTAINS WILL NOT BE COPIED OR DISCLOSED TO OTHERS EXCEPT WITH THE WRITTEN CONSENT OF PARKER HANNIFIN. WILL NOT BE USED TO THE DETRIMENT OF PARKER HANNIFIN, AND WILL BE RETURNED UPON REQUEST BY PARKER HANNIFIN.

ISSUE NO.	1	DESCRIPTION OF REVISION	DRAWN BY: ZN
E.C.N NO.	N/A	New Release	DRAWN DATE 22/06/2011
DATE	13/04/2011		Approvals using electronic PDM WORKFLOW (QSP05/25)

ALL DIMENSIONS IN UNLESS OTHERWISE STATED

DRAWING TITLE :
FLANGE TO COMPRESSION CONNECTOR
FLANGE HUB WALL THICKNESS CALCULATIONS

REMOVE ALL SHARP EDGES AND BURRS

INCH	METRIC	ANGULAR
(.00") ± .015"	(.0)mm ± .3mm	± 1/2°
(.000") ± .005"	(.00mm) ± 0.1mm	± 30'

UNLESS STATED 3rd ANGLE PROJECTION

GENERAL M/C FINISH 63min CLA/ 1.6mm RA
GEOMETRICAL TOL'S TO BS.308 PART 3.
ALL THREAD TOLERANCES ARE TO BE IN ACCORDANCE WITH PARKER IPD ESST01.

PART SIMILAR TO

DO NOT SCALE IF IN DOUBT ASK

Parker
Parker Hannifin Ltd
Instrumentation Products Division Europe
Riverside Road
Barnstaple
Devon
EX31 1NP
+44 (0)1271 313131

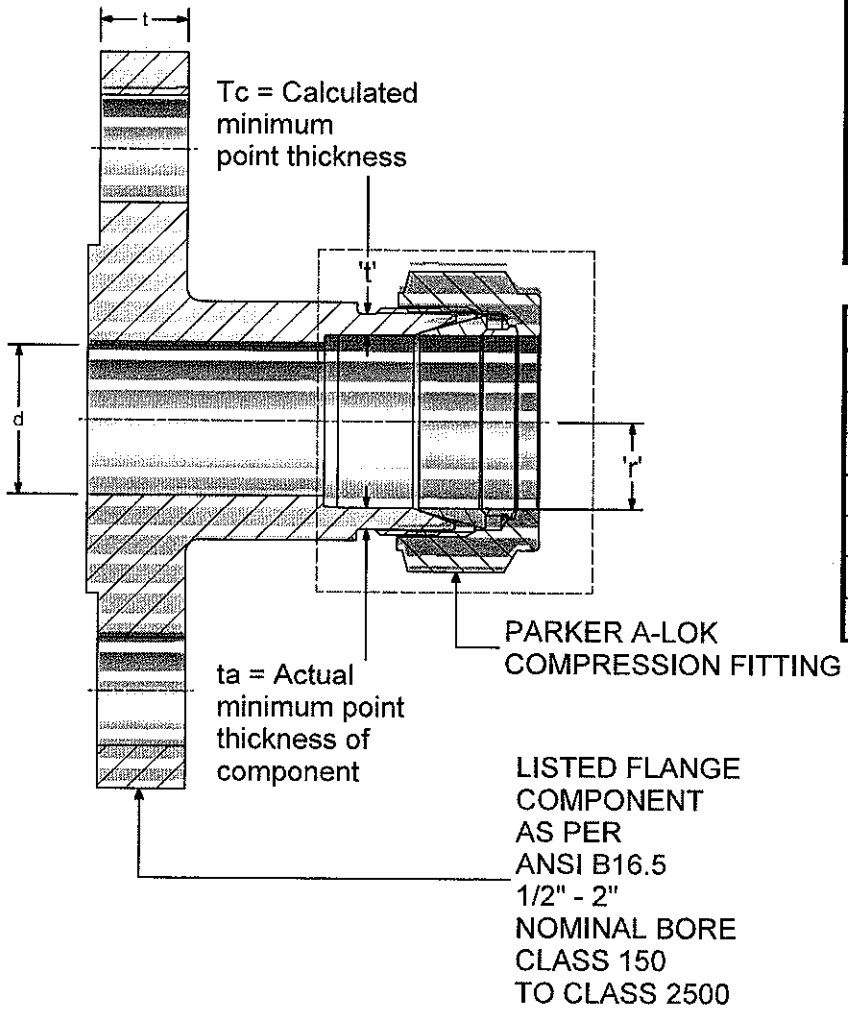

1" Flange Spec
Material: A182 F316
t = 1.125" / hub thickness = 1.32"
d = 1"
MAWP = 3600psi @ 100°F; 1750psi @ 1000°F
Hydrotest = 7059psi
MDMT = -325°F

1" A-LOK Spec
Material: A182 F316
ID = 1.4515" ± 0.0055"
OD = 1.730" ± 0.005"
Thread Engagement = 0.2238"
Thread size = 1 1/2" 20UN
A-LOK CRN = OA6793.5
t = 0.23" / r = 0.504"

Flange Rating:
ref B16.5 Class 1500 in BOM

0B11767.2

FOR MATERIAL AND PROCESS SPECIFICATIONS REFER TO GENRIC PROCESS CONTROL SHEET

FOR PART MARKING DETAILS REFER TO PART MARKING SPECIFICATION

THIS DRAWING CONTAINS INFORMATION THAT IS CONFIDENTIAL AND PROPRIETY TO PARKER HANNIFIN PLC. THIS DRAWING IS FURNISHED ON THE UNDERSTANDING THAT THE DRAWING AND THE INFORMATION IT CONTAINS WILL NOT BE COPIED OR DISCLOSED TO OTHERS EXCEPT WITH THE WRITTEN CONSENT OF PARKER HANNIFIN. WILL NOT BE USED TO THE DETRIMENT OF PARKER HANNIFIN, AND WILL BE RETURNED UPON REQUEST BY PARKER HANNIFIN.

ISSUE NO.	1	DESCRIPTION OF REVISION: New Release	DRAWN BY: ZN
E.C.N NO.	N/A		DRAWN DATE: 22/06/2011
DATE	13/04/2011		Approvals using electronic PDM WORKFLOW (QSP05/25)

ALL DIMENSIONS IN UNLESS OTHERWISE STATED

DRAWING TITLE:
FLANGE TO COMPRESSION CONNECTOR
FLANGE HUB WALL THICKNESS CALCULATIONS

REMOVE ALL SHARP EDGES AND BURRS

INCH	METRIC	ANGULAR
(.00") ± .016" (.000") ± .005"	(.0)mm ± .3mm (.00mm) ± 0.1mm	± 1/2° ± 30'

UNLESS STATED 3rd ANGLE PROJECTION

GENERAL M/C FINISH 63min CLA/ 1.6mm RA
GEOMETRICAL TOL'S TO BS.308 PART 3.
ALL THREAD TOLERANCES ARE TO BE IN ACCORDANCE WITH PARKER IPD ESST01.

PART SIMILAR TO

DO NOT SCALE IF IN DOUBT ASK

Parker
Parker Hannifin Ltd
Instrumentation Products Division Europe
Riverside Road
Barnstaple
Devon
EX31 1NP
+44 (0)1271 313131

FCB CRN Report Revision 2

the pressure equipment safety authority

9410 - 20 Ave N.W.
Edmonton, Alberta, Canada T6N 0A4
Tel: (780) 437-9100 / Fax: (780) 437-7787

October 13, 2011

Attention: Susan Turner
PARKER HANNIFIN CANADA IPD
4635 DURHAM RD S
GRIMSBY, ON

The design submission, tracking number 2011-02791, originally received on May 04, 2011 was surveyed and accepted for registration as follows:

CRN : 0B11767.2 **Accepted on:** October 13, 2011

Reg Type: New Design **Expiry Date:** October 13, 2020

Drawing No. : SCOPE OF REGISTRATION 3 PAGES As Noted

Fitting type: FLANGED CONNECTORS,1/4" THRU 1" ##150 THRU 2500

Design registered in the name of : PARKER HANNIFIN IPDE

The registration is conditional on your compliance with the following notes:

This registration is valid if the A-loks CRN 0A6793.52 that is part of the registration will be renewed after December 3,2011.
This registration is valid until the indicated expiry date only if the Manufacturer maintains a valid quality management system approved by an acceptable third-party agency until that date. Should the approval of the quality management system lapse before the expiry date indicated above, this registration shall become void.

An invoice covering survey and registration fees will be forwarded from our Revenue Accounts.

If you have any question don't hesitate to contact me by phone at (780) 433-0281 ext 3330 or fax (780) 437-7787 or e-mail grynchuk@absa.ca.

Sincerely,

M. Grynchuk

GRYNCHUK, MILLA

ABSA
the pressure equipment safety authority

9410 - 20 Ave N.W.
Edmonton, Alberta, Canada T6N 0A4
Tel: (780) 437-9100 / Fax: (780) 437-7787

November 24, 2017

Attention: Susan Turner
PARKER HANNIFIN INSTRUMENTATION CANADA
4635 DURHAM ROAD S
GRIMSBY, ON L3M 4G4

Email: sturner1@parker.com

<NOCOVER>
<TOFAXNUM:1-905-945-2203>
<TONAME:Susan Turner>

The design submission, tracking number 2017-05551, originally received on September 01, 2017 was surveyed and accepted for registration as follows:

CRN : 0H11767.2
Accepted on: November 24, 2017
Reg Type: NEW DESIGN
Expiry Date: November 24, 2027
Drawing No. : CATALOG 4190-FP-ACC As Noted
Fitting type: FLANGE CONNECTORS WITH CPI/ALOK TUBE FITTINGS
Design registered in the name of : PARKER HANNIFIN IPDE

Description	MAWP	Design Temperature
rating per tables		

The registration is conditional on your compliance with the following notes:

This acceptance letter of December 21 th 2017 supersedes the original acceptance letter issued on November 24, 2017 , we have revised the category of the fittings to comply with CSA B51.
CRN covers only Flange Connectors assemblies with CPI/Alok fittings CRN 0A06793.52
As indicated on AB-41 Statutory Declaration form and submitted documentation, the code of construction are ASME B31.3 and B16.5.
This registration is valid only for fittings fabricated at the location(s) covered by the QC certificate attached to the accepted AB-41 Statutory Declaration form.
This registration is valid only until the indicated expiry date and only if the Manufacturer maintains a valid quality management system approved by an acceptable third-party agency until that date. Should the approval of the quality management system lapse before the expiry date indicated above, this registration shall become void.

An invoice covering survey and registration fees will be forwarded from our Revenue Accounts.

If you have any question don't hesitate to contact me by phone at (780) 433-0281 ext 3330 or fax (780) 437-7787 or e-mail grynchuk@absa.ca.

Sincerely,

M. Grynchuk

GRYNCHUK, MILLA, P. Eng.
DOP Cert. No. D00005217

Alberta Municipal Affairs

ABSA
the pressure equipment safety authority

AB-41 2016-01

STATUTORY DECLARATION
Registration of Fittings

Parker

I, Marcus Ashford (name of applicant), Engineering Manager (position title) (must be in a position of authority)

of Parker Hannifin IPDE (name of manufacturer)

located at Riverside Road, Barnstaple, Devon, UK EX31 1NP with additional manufacturing at ~~265 Alabama Highway 21 North, Jacksonville Alabama, USA~~ (plant address)

do solemnly declare that the fittings listed hereunder, which are subject to the Safety Codes Act (check one)

☐ comply with the requirements of _____ (title of recognized North American Standard) which specifies the dimensions, materials of construction, pressure/temperature ratings and identification marking of the fittings, or

☒ are not covered by the provisions of a recognized North American standard and are therefore manufactured to comply with ASME B31.3 and ASME B16.5 (title of code of construction or other applicable document) as supported by the attached data which identifies the dimensions, materials of construction, pressure/temperature ratings and the basis for such ratings, and the marking of the fittings for identification.

I further declare that the manufacture of these fittings is controlled by a quality control program which has been verified by the following authority, DNV MANAGEMENT SYSTEMS as being suitable for the manufacture of these fittings to the stated standard. The fittings covered by this declaration, for which I seek registration, are

CATALOG 4190-FP-ACC - Flange Connectors

(brief description of fittings)

In support of this application, the following information, calculations and/or test data are attached:

See attached drawing, FCB CRN Report. N.B. : CRN 0A6793.5 also exists with respect to a portion of this design.

DECLARED before me at Bridgeport (city) in the County of Rosa UK (province or state)

this 25th day of October (Month), 2017 (Year)

(print) Maurice Langan (a Commissioner of Oaths or Notary Public)

(sign) _____ (a Commissioner of Oaths or Notary Public) _____ (signature of applicant)

For ABSA Office Use Only:

NOTES: OH11767.2 Open

To the best of my knowledge and belief, the application meets the requirements of the Safety Codes Act and CSA Standard B51, Clause 4.2, and is accepted for registration in Category A

Registration Number: OA11787.2 _____ (Signature of the Administrator/SCO)

Date Registered: NOV 24 2017 Expiry Date: 2027 November 24

The information you provide is necessary only for the administration of the programs as required by the Alberta Safety Codes Act and Regulations in the Pressure Equipment Discipline.